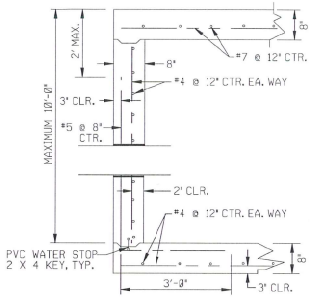

SECTION A-A
REINF. CONCRETE VAULT
(NOT FOR TRAFFIC LOADS)

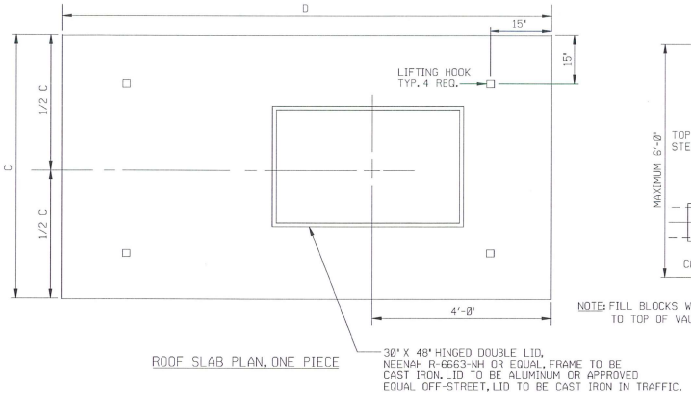

ROOF SLAB PLAN, ONE PIECE

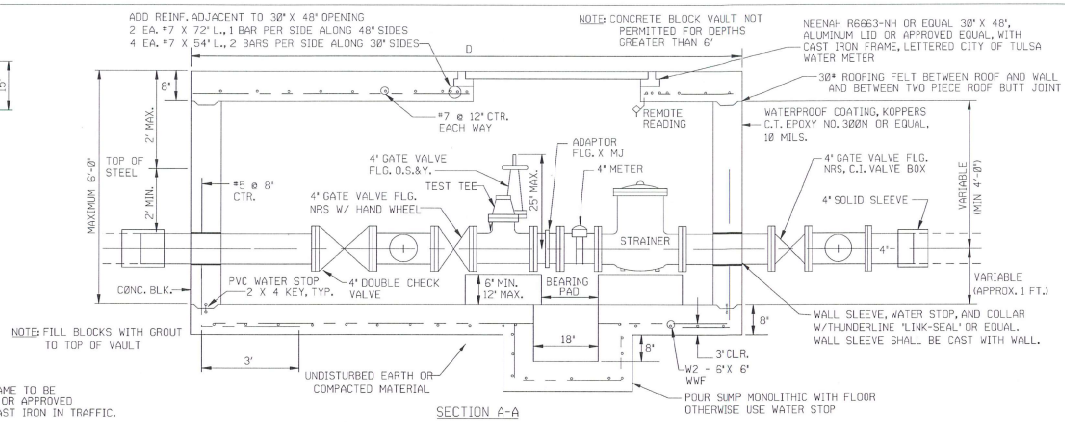

SECTION A-A
CONC. BLK. WALLS, REINF. CONC. TOP AND BASE
OFF-STREET VALVE VAULT TOP
(NOT FOR TRAFFIC LOADS)

NOTE:

1. IT SHALL BE THE RESPONSIBILITY OF THE CONTRACTOR TO FURNISH FITTINGS COMPATIBLE WITH THE TYPE OF PIPE FURNISHED.
2. WHERE COMPOUND METER IS FURNISHED WITH A TEST PLUG, IT WILL NOT BE NECESSARY TO INSTALL A TEST TEE. MATERIAL SUBMITTALS SHALL INDICATE THE PRESENCE OF A TEST PLUG.
3. BOLTS AND NUTS SHALL CONFORM TO ASTM A-307 GR. B, AND ASTM A-563 GR. A RESPECTIVELY. STRUCTURAL STEEL SHALL BE ASTM A-36
4. BYPASS VALVE SHALL BE SEALED SHUT BY CITY OF TULSA USING A WATER METER SEAL WIRE.
5. TEST TEE SHALL CONSIST OF
   1 - 4" X 4" X 4" TEE, FLG.
   1 - 4" X 4" NIPPLE, FLG. ON ONE END, THREADED ON OPPOSITE END WITH SCREW CAP
6. NOTICE SHALL BE GIVEN TO THE CITY OF TULSA 48 HOURS IN ADVANCE SO THAT A REPRESENTATIVE OF THE DEPT. MAY WITNESS THE POURING OF THE VAULT AND INSPECT THE MATERIALS. A REPORT SHALL BE FURNISHED ON THE 7 DAY AND 28 DAY STRENGTH OF THE CONCRETE WHICH SHALL BE AT LEAST 4000 PSI. REINFORCING STEEL SHALL BE GR. 60.
7. WHERE RESTRAINED JOINTS ARE REQUIRED, THEY SHALL BE EBBA MEGALUG SERIES 1100 OR EQUAL.
8. METER AND FITTINGS FROM VALVE TO VALVE SHALL BE ASSEMBLED IN A SHOP ENVIRONMENT APPROVED BY A REPRESENTATIVE OF THE CITY OF TULSA. METER AND FITTINGS SHALL BE DELIVERED TO THE JOB SITE WITH THE VALVES CLOSED IN ORDER TO PROTECT THE METER AND STRAINER.
9. USE DUCTILE IRON PIPING AND DI/CI FITTINGS FROM THE MAIN LINE TAPPING SLEEVE TO DOWNSTREAM FROM THE METER CHECK VALVE AT THE CONNECTING SLEEVE. PIPE SHALL BE WRAPPED WITH POLYETHYLENE FILM AND TAPED.
10. CHAMFER EXPOSED CORNERS. EDGE AROUND OPENINGS IN TOP.
11. BEARING PADS HAVE NO REBAR
12. VAULT ASSEMBLY SHALL INCLUDE ALL MATERIALS AND LABOR FOR AN INSTALLED AUTOMATED METER READING (AMR) DEVICE PER CONSTRUCTION SPECIFICATIONS DIVISION V. AMR DEVICE SHALL INCLUDE MIU ANTENNA PENETRATING THRU HATCH, MIU, POTTED REGISTER, REQUIRED CABLE, AND GEL-CAP (IF REQUIRED). AMR INSTALLATION SHALL BE APPROVED AND TESTED BY ENGINEER OR ENGINEER'S DESIGNEE.

METER	A	B	C	D	REMARKS
4" TURBO METER	21-1/2"	3'- 3"	5'- 6"	10'- 10"	
4" TURBO METER FIRE SERVICE	35-1/16"	3'- 3"	5'- 6"	12'- 0"	
4" COMPOUND METER	33"	3'- 0"	5'- 3"	10'- 8"	WITHOUT TEE
4" NEPTUNE PROTECTUS III FIRE FLOW METER W/STRAINER(FS)	33"	3'- 3"	6'- 0"	11'- 9"	
4" INVENSYS FIRELINE T.M.	51-7/8"	3'- 3"	6'- 0"	13'- 4"	

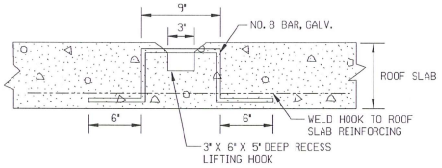

LIFTING HOOK DETAIL

NOTE: IN SIDEWALKS, COVER HOOK OPENING WITH A STEEL PLATE. SECURE WITH SCREWS AND EXPANSION SLEEVE ANCHORS.

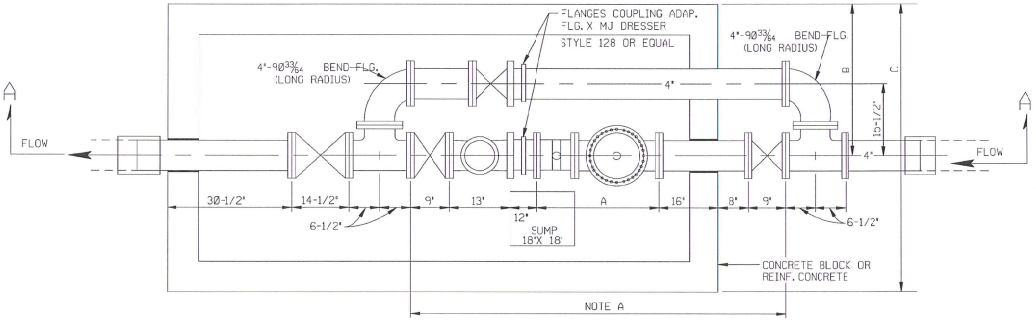

PLAN VIEW

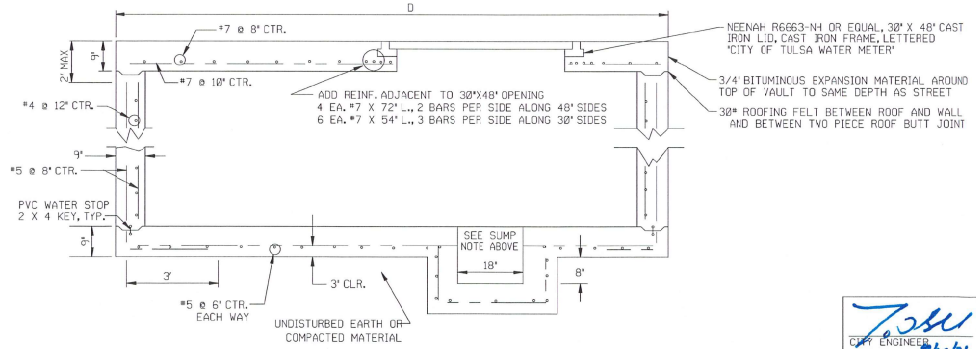

ALTERNATE VALVE
VAULT FOR TRAFFIC LOADS
REINFORCED CONCRETE

REVISION	BY	DATE

CITY ENGINEER 8/10/26

DESIGN MANAGER

CITY OF TULSA

4" METER ASSEMBLY AND VAULT

DATE: JULY 2026

STD. 527

PATH NAME: /E1/PARTS/STD/DGN_STDS/527-41N-METER.DGN DJN 07/15/2026