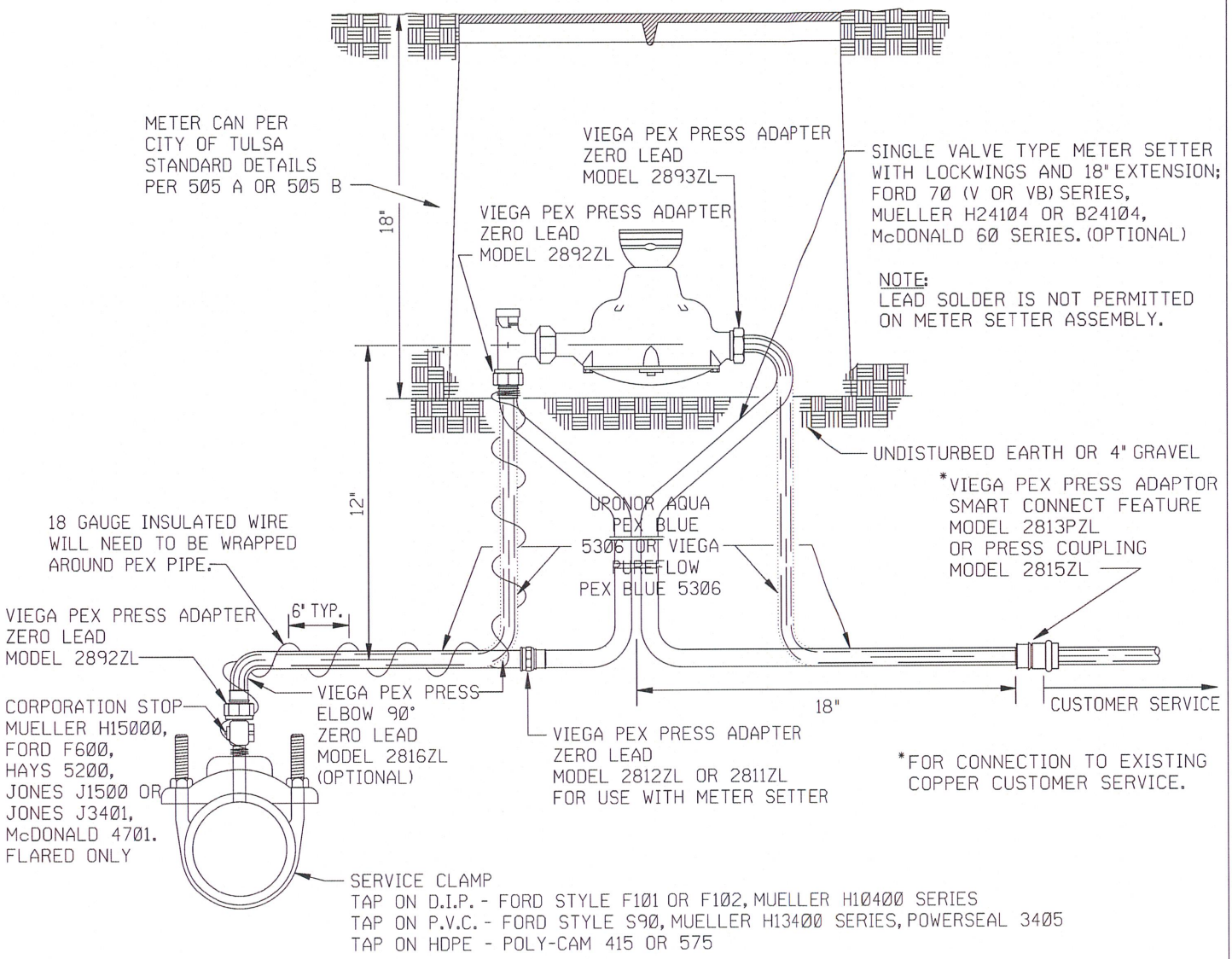

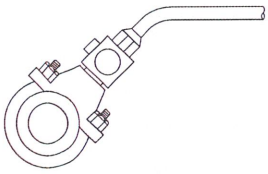

45° TAP

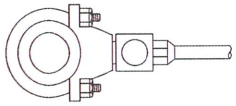

SIDE TAP

NOTE:

1. SERV. CLAMP REQUIRED FOR ALL SIZES PVC, AND FOR 4" AND SMALLER IRON. FOR 6" AND LARGER IRON, TAP DIRECTLY.
2. TAP AT ANGLE NECESSARY TO PROVIDE 30" OF COVER OVER THE SERVICE LINE.
3. LOCATE PEX LINE AT LEAST 50 FEET HORIZONTALLY FROM ANY GASOLINE STORAGE TANK AND LINES.
4. PEX SHALL BE 1" MINIMUM.

UPONOR AQUA PEX BLUE 5306 OR
VIEGA PUREFLOW PEX BLUE 5306

STANDARD METER SETTINGS FOR 5/8" X 3/4" AND 3/4" WATER SERVICE	
CITY OF TULSA, OKLAHOMA	
DRAWN BY: R.M.O. CHECKED BY: DATE: AUGUST 2025	APPROVED
NOT TO SCALE	STANDARD NO. 501A

PATH: /el/parts/std/DGN_stds/501A-mtr-set-3qtr.dgn DJN 08/18/2025